DATASHEET

HLSFF

H SERIES SENSORS

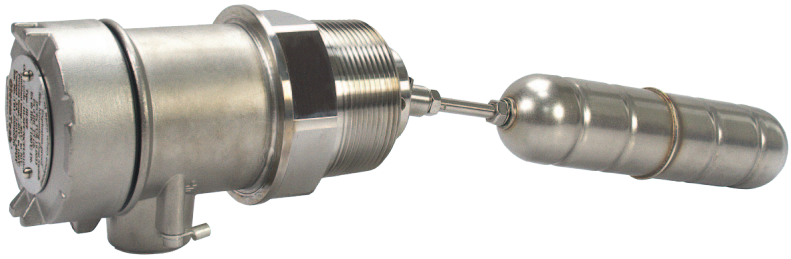

Highlights

- Provides point level detection of liquid using reliable micro switch design
- Does not require power
- Material: 316 SS (316L SS option)
- Process temperature: -40 to 100 °C (-40 to 212 °F)
- Electrical contact: SPDT (1C)
- Max pressure: 213.4 PSI / 15 kg/cm^2 / 14.7 BAR
- 10″ to 24″ (250 to 610 mm) float to thread options
- Supports Normally Open and Normally Closed
- NEMA 4X, IP66
- Zone 0 / Explosion-proof / Flameproof

IEC IECEx

Side-Mount Liquid Level Detection Solution

Micro Switch Reliability / Low Maintenance

The Float Type Level Switch by OleumTech is part of the H Series line of high quality instruments delivering unrivaled performance, reliability, and accuracy in the most demanding environments, including hazardous locations.

The float-based level switch is designed to be mounted on the side of a liquid storage tank and is used for detecting either overflow (high) or dry run (low) detection for alarm, monitoring, and control applications.

The HLSFF provides a relay switch output (SPDT) and can operate in either Normally Open (NO) or Normally Closed (NC) mode.

Durable 316SS Construction / Explosion-Proof

The H Series HLSFF Float Type Level Switch is certified for use in Zone 0 hazardous locations and is Explosion-Proof / Flameproof.

The HLSFF is a simple apparatus and does not require power to operate. It provides a single actuation point and can be ordered with a custom stem/arm length with a variety of process connection fitting options. Its housing is made of 316 stainless steel while the level switch can be ordered with the 316 or 316L option.

Technical Specifications

HARDWARE FEATURES	
Device Functionality	· Point Level Detection Switch using Float-based Micro Switch Technology
Interface	· Relay
CERTIFICATION & COMPLIANCE	
Safety	· Explosion-proof/Flameproof for Use in Hazardous Locations · IECEx TUR 19.0035 · Ex db IIB T5 Gb, Ex tb IIIC T100 °C Db
MECHANICAL SPECIFICATIONS	
Dimensions (Head)	· 2.76" (W) x 2.76" (H) x 3.15" (D) / 70 mm (W) x 70 mm (H) x 80 mm (D)
Float to Thread Length	· 10" to 24" (250 mm to 610 mm) in 1" Increments
Specific Gravity (SG)	· >0.65
Package Dimensions (UF10)	· 17" (W) x 4.75" (H) x 4.75" (D) / 432 mm (W) x 121 mm (H) x 121 mm (D)
Package Weight (UF10)	· 4.5 lbs (2.0 kg)
Ports	· One 1/2" NPT
Connection Fitting (Standard)	· 2" NPT
Connection Fitting Options	· NPT, BSP, PF, 150 lbs, 300 lbs
Enclosure Casing Material	· Type 4X 316 Stainless Steel; IP66
Switch Material	· 316 Stainless Steel (316L Option)
Operating Pressure	· 213.4 PSI / 15 kg/cm^2 (14.7 BAR)
ELECTRICAL SPECIFICATIONS	
Signal Output	· SPDT Micro Switch (Omron VX-5-1A2), 3 A / 250 Vac / 30 Vdc
Output Types	· Normally Open and Normally Closed
GENERAL SPECIFICATIONS	
Operating Conditions	· Process Temperature: -40 to 100 °C (-40 to 212 °F) · Ambient Temperature: -40 to 70 °C (-40 to 158 °F) · Humidity: 0 to 99 %, Non-Condensing
Warranty	· 2-Year Parts and Labor
ORDERING INFORMATION	
Model Numbers Series	· HLSFF

Dimensions

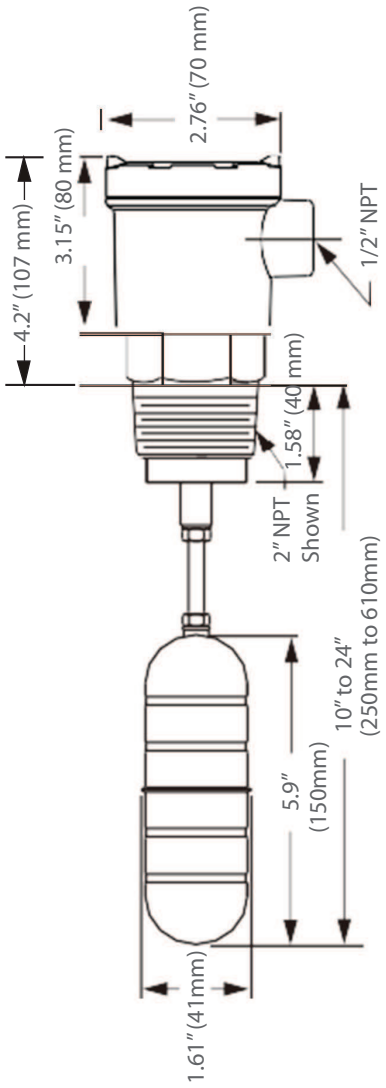

Ordering Information

H L S F F U F 1 0 - 6

Model Series

Connection Type
U = NPT
O = 150 lbs (Flange)
P = 300 lbs (Flange)
R = PF
T = BSP

Connection Size
E = 1.5″ F = 2″ (Standard)
G = 2.5″ H = 3″ I = 4″
J = 5″ (Flange)
K = 6″ (Flange)

Arm Length (Thread to Float)
10″ to 24″ in 1″ Increments

Material
6 = 316 SS
9 = 316L SS

©2020 OleumTech Corporation. All rights reserved. OleumTech is registered trademarks of OleumTech Corporation in the United States.
Specifications, design, and product descriptions subject to change without notice. Document ID: 67-4135-001_B